Installation Speaker

WS-15T/30T/50T/80T

► WS-15T ► WS-30T ► WS-50T ► WS-80T

FEATURES

- High-quality Trans for Low/High
- Water and damp-proof of IP54
- Designed to Minimize Sound Distortion
- Consolidated Transmission of Low-pitched Sound
- Aesthetic Design
- Ease of Installation
- EASE, EASE Focus Data

SPECIFICATIONS

Model		WS-15T	WS-30T	WS-50T	WS-80T
Unit		2.5"	4"	5"	6.5"
Power Handling (AES)		15W	30W	50W	80W
Input Power	100V	15W	30W/15W	50W/25W	80W/40W
	70V	-	-	-	-
Impedance	100V	660Ω	330Ω/660Ω	200Ω/400Ω	125Ω/250Ω
	70V	-	-	-	-
	LOW	8Ω	8Ω	8Ω	8Ω
Frequency Range (-20%)		111Hz ~ 20kHz	83Hz ~ 20kHz	69Hz ~ 20kHz	60Hz ~ 20kHz
Sensitivity (1W/1m)		79dB	84dB	87dB	86dB
Maximum SPL [Cont]		90dB	95dB	104dB	105dB
Norminal Dispersion (HxV)	1kHz	173˚x159˚	156˚x144˚	195˚x188˚	150˚x161˚
	4kHz	102˚x99˚	98˚x32˚	94˚x78˚	62˚x22˚
Weight (Net)		0.89kg / 1.96lb	1.68kg / 3.70lb	2.34kg / 5.15lb	3.58kg / 7.89lb
Dimensions (Net, WxHxD)		92x120x114mm 3.6x4.7x4.5in	139x210x129mm 5.5x8.3x5.1in	173x250x150mm 6.8x9.8x5.9in	210x311x169mm 8.3x12.2x6.7in

* Design and specification are subject to be changed for the improvement of product quality without pre notice.

*** When using high impedance, do not convert to 8Ω . It may cause an outbreak of fire due to overvoltage pressure.**

FREQUENCY RESPONSE

► WS-15T

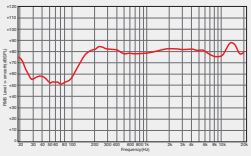

► WS-30T

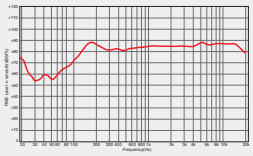

► WS-50T

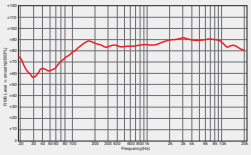

► WS-80T

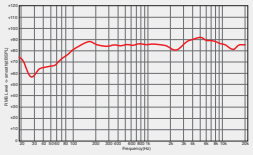

DIMENSIONAL

► WS-15T

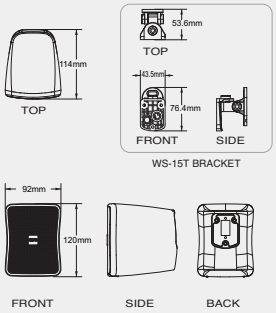

► WS-30T

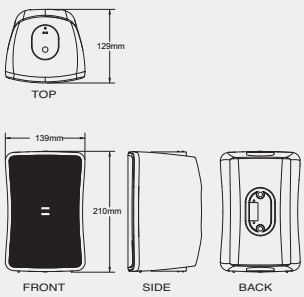

► WS-50T

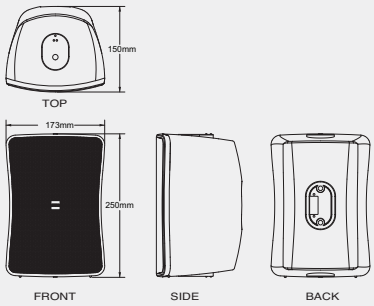

INSTALLATION SPEAKER

interM

Installation Speaker

WS-15T/30T/50T/80T

DIMENSIONAL

▸ WS-80T

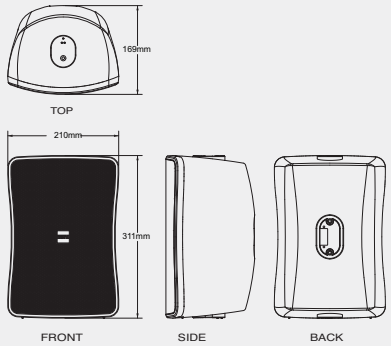

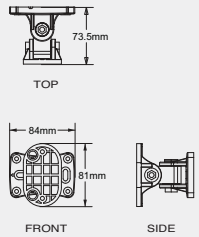

KNUCKLE BRACKET
(WS-30T/WS-50T/WS-80T)

▸ WS-30T ▸ WS-50T ▸ WS-80T

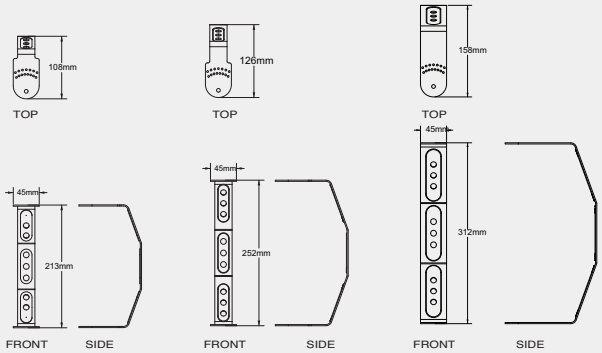

U-BRACKET

U-BRACKET INSTALLATION

▸ WS-30T/WS-50T/WS-80T

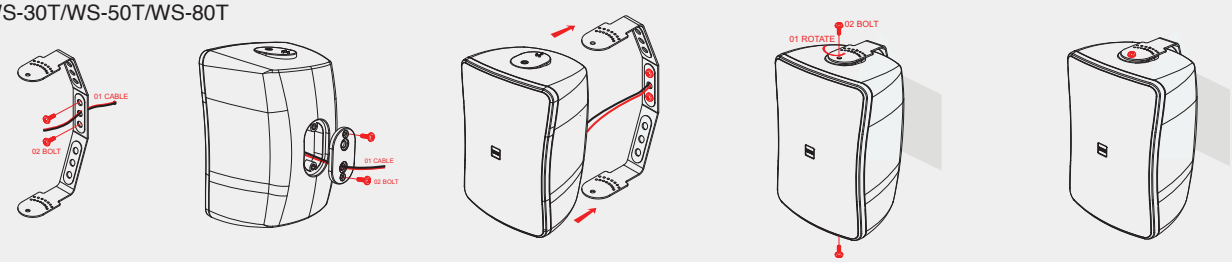

STEP 01 STEP 02 STEP 03 STEP 04 STEP 05

KNUCKLE BRACKET INSTALLATION

▸ WS-15T

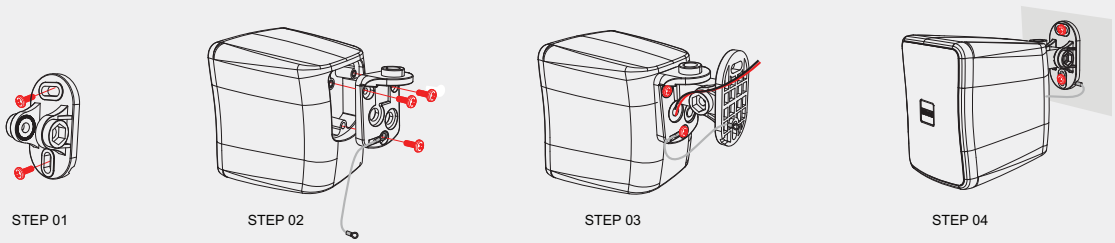

STEP 01 STEP 02 STEP 03 STEP 04

▸ WS-30T/WS-50T/WS-80T

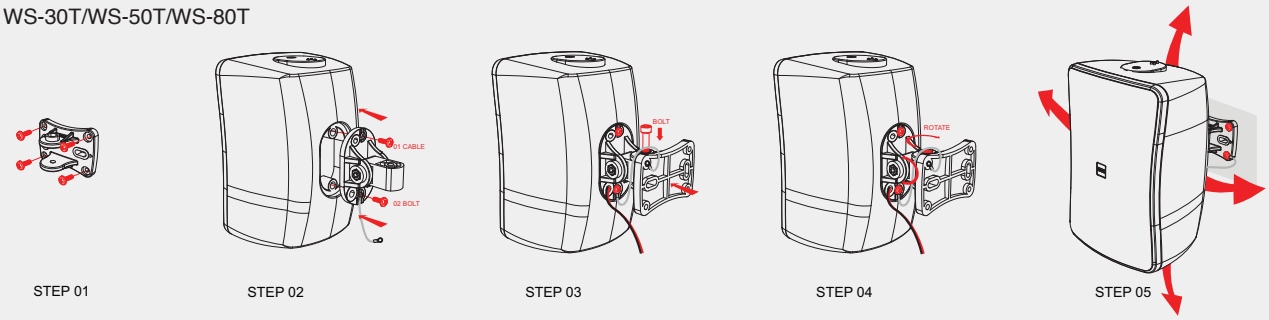

STEP 01 STEP 02 STEP 03 STEP 04 STEP 05

* When you install outdoor, Please install by inserting the waterproof back-gasket.

Inter-M Corporation

- **Office :** 719, DOBONG-RO, DOBONG-GU, SEOUL, KOREA
- **Tel :** +82-2-2289-8140~8, **Fax :** +82-2-2289-8149
- **Home page:** http://www.inter-m.com, **E-mail:** overseas@inter-m.com

Inter-M Corp. (IMA)

- **Office :** 5666 CORPORATE AVE. CYPRESS, CA 90630
- **Tel :** +1-714-828-2200, **Fax :** +1-714-828-2210
- **E-mail :** info@inter-m.net, **Home Page :** www.inter-m.net

NO: 141549